DIESEL GENERATOR SET
MTU 12V2000 DS825
STANDBY POWER: 825 KVA

380V - 415V/50 Hz/Air Charge Air Cooling

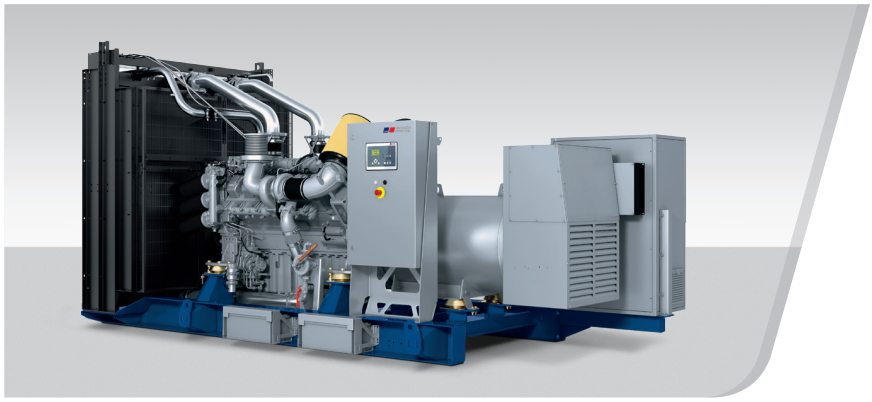

Optional equipment and finishing shown. Standard may vary.

PRODUCT HIGHLIGHTS

// **Benefits**
- Low fuel consumption
- Optimized system integration ability
- High reliability and availability of power
- Long maintenance intervals
- Optimized ratio between size and power
- Wide operating range without derating

// **MTU Onsite Energy is a single-source supplier**

// **Global product support**

// **Standards**
- Engine-generator set is designed and manufactured in facilities certified to standards ISO 2008:9001 and ISO 2004:14001
- Generator set complies to G3 according to ISO 8528
- Generator meets NEMA MG1, BS5000, ISO, DIN EN and IEC standards
- NFPA 110

// **Power Rating**
- System rating: 825 kVA
- Accepts rated load in one step per NFPA 110
- Generator set complies to G3 according to ISO 8528-5
- Generator set exceeds load steps according to ISO 8528-5

// **Performance Assurance Certification (PAC)**
- Engine-generator set tested to ISO 8528-5 for transient response
- 85% load factor for standby power applications
- Verified product design, quality and performance integrity
- All engine systems are prototype and factory tested

// **Complete range of accessories available**
- Control panel
- Circuit breaker/power distribution
- Fuel system
- Fuel connections with shut-off valve mounted to base frame
- Starting/charging system
- Exhaust system
- Mechanical radiator
- Container and Canopy

// **Emissions**
- TA-Luft optimized
- Tier 2 and NEA (ORDE) optimization optionally available

// **Certifications**
- CE certification option
- German Grid Code Certification (BDEW) option

APPLICATION DATA[1]

// Engine

		Emission optimized[2]
Manufacturer		MTU
Model		12V2000G76F
Type		4-cycle
Arrangement		12V
Displacement:	l	26.8
Bore:	mm	135
Stroke:	mm	156
Compression ratio		17.5
Rated speed:	rpm	1500
Engine governor		ADEC
Speed regulation		± 0.25%
Max power:	kWm	732
Mean effective pressure:	bar	21.9
Air cleaner		Dry

// Fuel System

Maximum fuel lift:	m	5
Total fuel flow:	l/min	30

// Fuel Consumption[3]

		l/hr
At 100% of power rating:		174.6
At 75% of power rating:		133.0
At 50% of power rating:		93.0

// Lube oil system

Total oil system capacity:	l	80
Max. lube oil temperature (alarm):	°C	103
Max. lube oil temperature (shutdown):	°C	105
Min. lube oil pressure (alarm):	bar	4.5
Min. lube oil pressure (shutdown):	bar	4

// Combustion Air Requirements

		Emission optimized[2]
Combustion air volume:	m^3/s	0.9
Max. air intake restriction:	mbar	40

// Cooling/Radiator System

Coolant flow rate (HT circuit):	m^3/h	31.6
Heat rejection to coolant:	kW	300
Heat rejection to charge air:	kW	160
Heat radiated to ambient:	kW	35
Fan power for mech. radiator (40°C):	kWm	34
Fan power for mech. radiator (50°C):	kWm	51.1
Air flow required for mech. radiator (40°C) cooled unit:	m^3/min	969
Air flow required for mech. radiator (50°C) cooled unit:	m^3/min	1328
Engine coolant capacity (without cooling equipment):	l	63
Radiator coolant capacity (40°C):	l	59
Radiator coolant capacity (50°C):	l	140
Max. coolant temperature (warning):	°C	102
Max. coolant temperature (shutdown):	°C	105

// Exhaust System

Exhaust gas temp. (after turbocharger):	°C	535
Exhaust gas volume:	m^3/s	2.43
Maximum allowable back pressure:	mbar	50
Minimum allowable back pressure:	mbar	30

// Generator

Protection class	IP23
Insulation class	H
Voltage regulation (steady state)	± 0.25%
Rado interference class	N

① All data refers only to the engine and is based on ISO standard conditions (25°C and 100m above sea level).
② Emission optimized data refer to TA-Luft optimized and NEA (ORDE) optimized/Tier 2 compliant engines.
③ Values referenced are in accordance with ISO 3046-1. Conversion calculated with fuel density of 0.83 g/ml.
All fuel consumption values refer to rated engine power.

STANDARD AND OPTIONAL FEATURES

// System Ratings (kW/kVA)

Generator model	Voltage	with mechanical radiator		
		kWel	kVA*	AMPS
Basic: Marathon 575RSL7180	380 V	660	825	1253
Advanced: Marathon 575RSL7181	400 V	660	825	1191
(Low voltage Marathon standard)	415 V	660	825	1148
Basic: Marathon 740RSL7182	380 V	660	825	1253
Advanced: Marathon 740RSL7183	400 V	660	825	1191
(Low voltage Marathon oversized)	415 V	660	825	1148
Leroy Somer LSA 49.1 L11	380 V	660	825	1253
(Low voltage Leroy Somer)	400 V	660	825	1191
	415 V	660	825	1148
Leroy Somer LSA 50.2 M6	380 V	660	825	1253
(Low voltage Leroy Somer oversized)	400 V	660	825	1191
	415 V	660	825	1148

* cos phi = 0,8

// Engine

- ■ 4-Cycle
- ■ Standard single stage air filter
- ■ Oil drain extension & shut-off valve
- ■ Full flow oil filters
- ■ Closed crankcase ventilation
- ■ ADEC electronic isochronous engine governor
- ■ Common rail fuel injection
- ■ Dry exhaust manifold
- ■ Electric starting motor (24V)
- ■ TA-Luft optimized engine
- ☐ Tier 2 optimized engine
- ☐ NEA (ORDE) optimized engine

// Generator

- ■ NEMA MG1, BS5000, ISO, DIN EN and IEC standards
- ■ Self-ventilated
- ■ Superior voltage waveform
- ■ Solid state, volts-per-Hertz regulator
- ■ Ingress protection IP 23
- ■ 3 phase voltage sensing
- ■ 3% maximum harmonic content
- ■ 2/3 pitch stator windings
- ■ No load to full load regulation
- ■ ±0.25% voltage regulation no load to full load
- ■ Brushless alternator with brushless pilot exciter
- ■ 4 pole, rotating field
- ■ Sustained short circuit current of up to 250% of the rated current for up to 10 seconds (Marathon generator)
- ☐ Sustained short circuit current of up to 300% of the rated current for up to 10 seconds (Leroy Somer generator)
- ■ Marathon low voltage generator
- ☐ Leroy Somer generator
- ☐ Oversized generator

STANDARD AND OPTIONAL FEATURES, CONTINUATION

// Cooling System

- ■ Jacket water pump
- ■ Thermostat(s)
- ■ Air charge air cooling
- ■ Mechanical radiator
- ☐ Jacket water heater

// Control Panel

- ■ Pre-wired control cabinet for easy application of customized controller (V1+)
- ☐ Island operation (V2)
- ☐ Automatic mains failure operation with ATS (V3a)
- ☐ Automatic mains failure operation incl. control of generator and mains breaker (V3b)
- ☐ Island parallel operation of multiple gensets (V4)
- ☐ Automatic mains failure operation with short (< 10s) mains parallel overlap synchronization (V5)
- ☐ Mains parallel operation of a single genset (V6)
- ☐ Mains parallel operation of multiple gensets (V7)
- ☐ Basler controller
- ☐ Deif controller
- ■ Complete system metering
- ■ Digital metering
- ■ Engine parameters
- ■ Generator protection functions
- ■ Engine protection
- ■ SAE J1939 engine ECU communications
- ■ Parametrization software
- ■ Multilingual capability
- ■ Multiple programmable contact inputs
- ■ Multiple contact outputs
- ■ Event recording
- ■ IP 54 front panel rating with integrated gasket
- ☐ Different expansion modules
- ☐ Remote annunciator
- ☐ Daytank control
- ☐ Generator winding temperature monitoring
- ☐ Generator bearing temperature monitoring
- ☐ Differential protection with multi-function protection relay
- ☐ Modbus RTU-TCP gateway

// Circuit Breaker/Power Distribution

- ☐ 3-pole circuit breaker
- ☐ 4-pole circuit breaker
- ☐ Manual-actuated circuit breaker
- ☐ Electrical-actuated circuit breaker
- ☐ Base frame mounted circuit breaker
- ☐ Stand-alone circuit breaker in separate switch box

// Fuel System

- ■ Flexible fuel connectors mounted to base frame
- ☐ Fuel filter with water separator
- ☐ Switchable fuel filter with water separator
- ☐ Fuel cooler

■ Represents standard features ☐ Represents optional features

STANDARD AND OPTIONAL FEATURES, CONTINUATION

// Starting/Charging System

- ■ 24V starter
- ☐ Starter batteries
- ☐ Battery charger
- ☐ Redundant starter

// Mounting System

- ■ Welded base frame
- ■ Resilient engine and generator mounting
- ■ Modular base frame design

// Exhaust System

- ☐ Exhaust bellows with connection flange
- ☐ Exhaust silencer with 10 dB(A) sound attenuation
- ☐ Exhaust silencer with 30 dB(A) sound attenuation
- ☐ Exhaust silencer with 40 dB(A) sound attenuation
- ☐ Y-connection-pipe

WEIGHTS AND DIMENSIONS

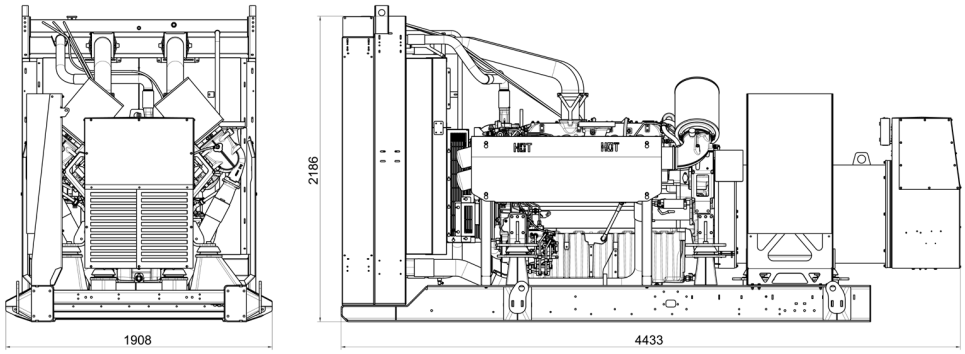

Drawing above for illustration purposes only, based an standard open power 400 Volt engine-generator set. Lengths may vary with other voltages. Do not use for installation design. See website for unit specific template drawings.

System	Dimensions (L x W x H)	Weight (dry/less tank)
Open Power Unit (OPU)	4440 x 1910 x 2190 mm	6260 kg

Weights and dimensions are based on open power units and are estimates only. Consult the factory for accurate weights and dimensions for your specific engine-generator set.

SOUND DATA

// Consult your local MTU Onsite Energy distributor for sound data.

EMISSIONS DATA

// Consult your local MTU Onsite Energy distributor for emissions data.

RATING DEFINITIONS AND CONDITIONS

// Standby ratings apply to installations served by a reliable utility source. The standby rating is applicable to varying loads for the duration of a power outage. No overload capability for this rating. Ratings are in accordance with ISO 8528-1, ISO-3046-1, BS 5514 and AS 2789. Average Load Factor: ≤ 85%. Operating hours/year: max. 500.
// Consult your local MTU Onsite Energy Power Generation Distributor for derating information.

Subject to change. | 3239581 | Edition 02/18 | EPC 2018-10.

Materials and specifications subject to change without notice.