DIESEL GENERATOR SET
MTU 20V4000 DS4000

11 kV/50 Hz/Standby Power/NEA (ORDE) + Tier 2 Optimized
MTU 20V4000G94LF/Water Charge Air Cooling

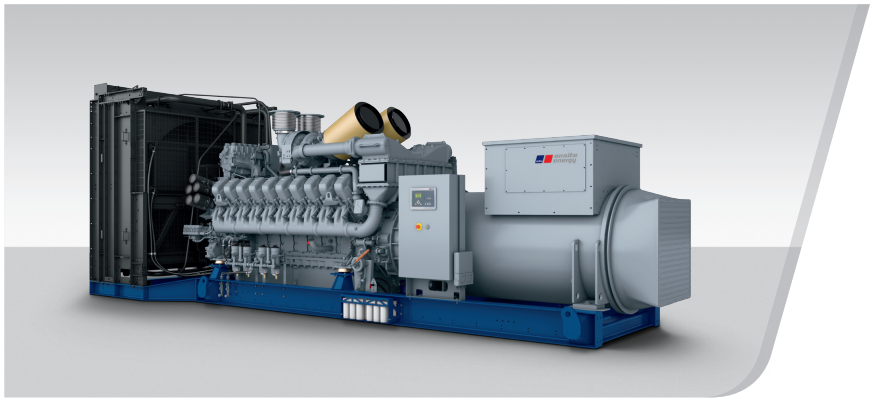

Optional equipment and finishing shown. Standard may vary.

PRODUCT HIGHLIGHTS

// **Benefits**
- Low fuel consumption
- Optimized system integration ability
- High reliability
- High availability of power
- Long maintenance intervals

// **MTU Onsite Energy is a single-source supplier**

// **Support**
- Global product support offered

// **Standards**
- Engine-generator set is designed and manufactured in facilities certified to standards ISO 2008:9001 and ISO 2004:14001
- Generator set complies to ISO 8528
- Generator meets NEMA MG1, BS5000, ISO, DIN EN and IEC standards
- NFPA 110

// **Power Rating**
- System ratings: 3950 kVA - 4000 kVA
- Accepts rated load in one step per NFPA 110
- Generator set complies to G3 according to ISO 8528-5
- Generator set exceeds load steps according to ISO 8528-5

// **Performance Assurance Certification (PAC)**
- Engine-generator set tested to ISO 8528-5 for transient response
- 85% load factor
- Verified product design, quality and performance integrity
- All engine systems are prototype and factory tested

// **Complete range of accessories available**
- Control panel
- Power panel
- Fuel system
- Fuel connections with shut-off valve mounted to base frame
- Starting/charging system
- Exhaust system
- Electrical driven radiator
- Medium and oversized voltage alternators

// **Emissions**
- Tier 2 optimized engine
- NEA (ORDE) optimized

// **Certifications**
- CE certification option

APPLICATION DATA[1]

// Engine

Manufacturer	MTU
Model	20V4000G94LF
Type	4-cycle
Arrangement	20V
Displacement: l	95.4
Bore: mm	170
Stroke: mm	210
Compression ratio	16.4
Rated speed: rpm	1500
Engine governor	ADEC (ECU 9)
Max power: kWm	3308
Air cleaner	Dry

// Fuel System

Maximum fuel lift: m	5
Total fuel flow: l/min	27

// Fuel Consumption[2]

	l/hr	g/kwh
At 100% of power rating:	818	205
At 75% of power rating:	598	200
At 50% of power rating:	429	215

// Liquid Capacity

Total oil system capacity: l	390
Engine jacket water capacity: l	260
Intercooler coolant capacity: l	50

// Combustion Air Requirements

Combustion air volume: m^3/s	4.7
Max. air intake restriction: mbar	30

// Cooling/Radiator System

Coolant flow rate (HT circuit): m^3/h	80
Coolant flow rate (LT circuit): m^3/h	44
Heat rejection to coolant: kW	1270
Heat radiated to charge air cooling: kW	930
Heat radiated to ambient: kW	105
Fan power for electr. radiator (40°C): kW	105

// Exhaust System

Exhaust gas temp. (after turbocharger): °C	482
Exhaust gas temp. (before turbocharger): °C	693
Exhaust gas volume: m^3/s	11.9
Maximum allowable back pressure: mbar	50
Minimum allowable back pressure: mbar	–

① All data refers only to the engine and is based on ISO standard conditions (25°C and 100m above sea level).
② Values referenced are in accordance with ISO 3046-1. Conversion calculated with fuel density of 0.83 g/ml.
All fuel consumption values refer to rated engine power and are approximate values.

STANDARD AND OPTIONAL FEATURES

// System Ratings (kW/kVA)

Generator model	Voltage	NEA (ORDE) + Tier 2 optimized without radiator		
		kWel	kVA*	AMPS
Leroy Somer LSA54.2 ZL12 (Medium volt. Leroy Somer)	11 kV	3160	3950	207
Marathon 1040FDH7105 (Medium volt. Marathon)	11 kV	3200	4000	210
Leroy Somer LSA54.2 ZL14 (MV Leroy Somer oversized)	11 kV	3160	3950	207
Leroy Somer LSA54.2 ZL14 (Engine output optimized)	11 kV	3200	4000	210

* cos phi = 0,8

// Engine

- ■ 4-Cycle
- ■ Standard single stage air filter
- ■ Oil drain extension & shut-off valve
- ■ Closed crankcase ventilation
- ■ Governor-electronic isochronous
- ■ Common rail fuel injection
- ■ Tier 2 optimized engine
- ■ NEA (ORDE) optimized engine

// Generator

- ■ 4 pole three-phase synchronous generator
- ■ Brushless, self-excited, self-regulating, self-ventilated
- ■ Digital voltage regulator
- ■ Anti condensation heater
- ■ Stator winding Y-connected, accessible neutral (brought out)
- ■ Protection IP23
- ■ Insulation class H, utilization acc. to H
- ■ Radio suppression EN55011, group 1, cl. B
- ■ Short circuit capability 3xIn for 10sec
- ■ Winding and bearing RTDs (without monitoring)
- ■ Excitation by AREP + PMI
- ■ Mounting of CT´s: 3x 2 core CT´s
- ■ Winding pitch: 5/6 winding
- ■ Voltage setpoint adjustment ± 5%
- ■ Meets NEMA MG-1, BS 5000, IEC 60034-1, VDE 0530, DIN EN 12601, AS1359 and ISO 8528 requirements
- ■ Leroy Somer medium voltage generator
- ☐ Marathon medium voltage generator
- ☐ Oversized generator

// Cooling System

- ■ Jacket water pump
- ■ Thermostat(s)
- ■ Water charge air cooling
- ☐ Electrical driven front-end cooler
- ☐ Jacket water heater
- ☐ Pulley for fan drive

■ Represents standard features ☐ Represents optional features

STANDARD AND OPTIONAL FEATURES, CONTINUATION

// Control Panel

- ■ Pre-wired control cabinet for easy application of customized controller (V1+)
- ☐ Island operation (V2)
- ☐ Automatic mains failure operation with ATS (V3a)
- ☐ Automatic mains failure operation incl. control of generator and mains breaker (V3b)
- ☐ Island parallel operation of multiple gensets (V4)
- ☐ Automatic mains failure operation with short (< 10s) mains parallel overlap synchronization (V5)
- ☐ Mains parallel operation of a single genset (V6)
- ☐ Mains parallel operation of multiple gensets (V7)
- ☐ Basler controller
- ☐ Deif controller
- ■ Complete system metering
- ■ Digital metering
- ■ Engine parameters
- ■ Generator Protection Functions
- ■ Engine protection
- ■ SAE J1939 engine ECU communications
- ■ Parametrization software
- ■ Multilingual capability
- ■ Multiple programmable contact inputs
- ■ Multiple contact outputs
- ■ Event recording
- ■ IP 54 front panel rating with integrated gasket
- ☐ Remote annunciator
- ☐ Daytank control
- ☐ Generator winding temperature and temperature monitoring
- ☐ Modbus TCP-IP

// Power Panel

- ☐ Available in 600x600 mm
- ☐ Phase monitoring relay 230V/400V
- ☐ Supply for battery charger
- ☐ Supply for jacket water heater
- ☐ Supply for anti condensation heating
- ☐ Plug socket cabinet for 230V compatible Euro/USA

// Fuel System

- ■ Flexible fuel connectors mounted to base frame
- ☐ Fuel filter with water separator
- ☐ Fuel filter with water separator heavy-duty
- ☐ Switchable fuel filter with water separator
- ☐ Switchable fuel filter with water separator heavy-duty
- ☐ Separate fuel cooler
- ☐ Fuel cooler integrated into cooling equipment

// Starting/Charging System

- ■ 24V starter
- ☐ Starter batteries, cables, rack, disconnect switch
- ☐ Battery charger
- ☐ Redundant starter 2x 15kW

■ Represents standard features ☐ Represents optional features

STANDARD AND OPTIONAL FEATURES, CONTINUATION

// Mounting System

- ■ Welded base frame
- ■ Resilient engine and generator mounting
- ■ Modular base frame design

// Exhaust System

- ■ Exhaust bellows with connection flange
- ☐ Exhaust silencer with 10 dB(A) sound attenuation
- ☐ Exhaust silencer with 30 dB(A) sound attenuation
- ☐ Exhaust silencer with 40 dB(A) sound attenuation
- ☐ Y-connection-pipe

■ Represents standard features ☐ Represents optional features

WEIGHTS AND DIMENSIONS

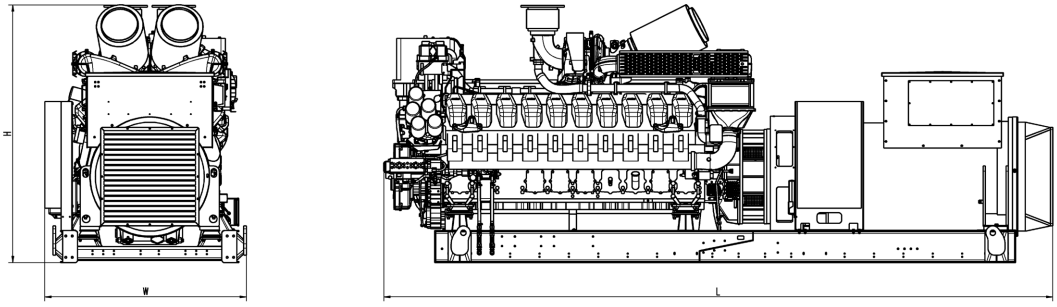

Drawing above for illustration purposes only, based an standard open power 11 kV engine-generator set. Lengths may vary with other voltages. Do not use for installation design. See website for unit specific template drawings.

System	Dimensions (L x W x H)	Weight (dry/less tank)
Open Power Unit (OPU)	6339 x 1887 x 2415 mm	19350 kg

Weights and dimensions are based on open power units and are estimates only. Consult the factory for accurate weights and dimensions for your specific engine-generator set.

SOUND DATA

// Consult your local MTU Onsite Energy distributor for sound data.

EMISSIONS DATA

// Consult your local MTU Onsite Energy distributor for emissions data.

RATING DEFINITIONS AND CONDITIONS

// Standby ratings apply to installations served by a reliable utility source. The standby rating is applicable to varying loads for the duration of a power outage. No overload capability for this rating. Ratings are in accordance with ISO 8528-1, ISO-3046-1, BS 5514 and AS 2789. Average Load Factor: ≤ 85%. Operating hours/year: max. 500.
// Consult your local MTU Onsite Energy Power Generation Distributor for derating information.

Subject to change. | 32310771 | Edition 01/18 | ESM 2018-11.

Materials and specifications subject to change without notice.